TOOLING SYSTEM

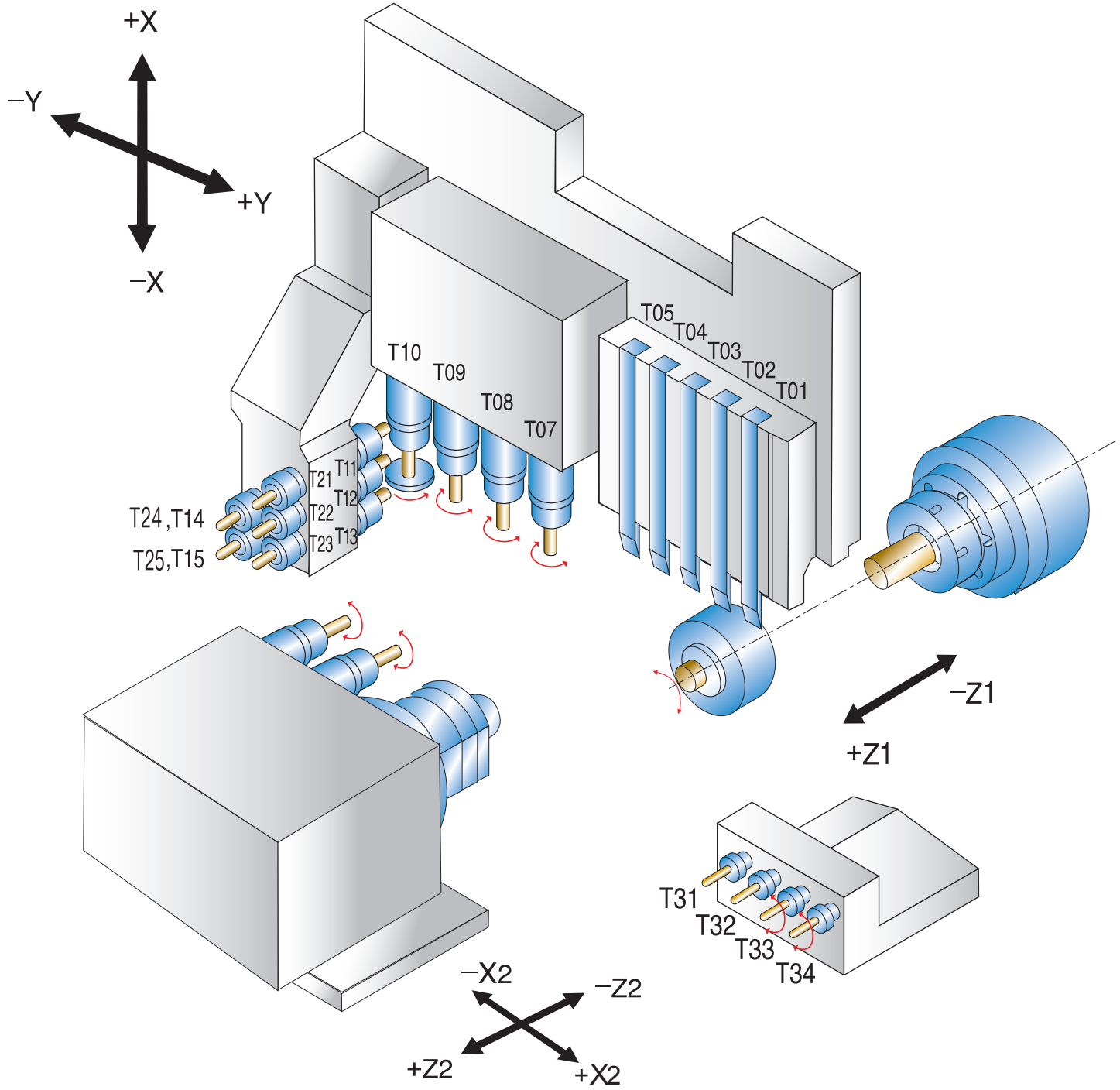

CNC SWISS-TURN

CNC SWISS TYPE
AUTOMATIC LATHE

SA20B / SA32B

NEXTURN
SWISS TURN LEADER

Optimized for High Producti
Impressive Price and Perform

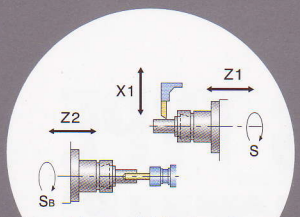

Front-end & Back-end Simultaneous Machining

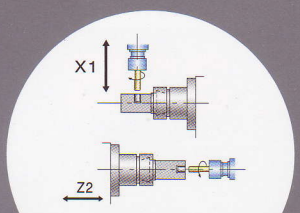

Rigid Tapping (Back & Cross)

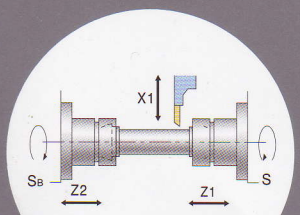

Synchronous Control

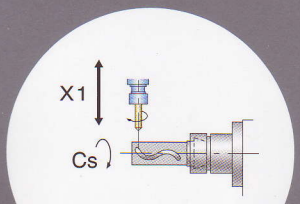

Cs Contouring (Maln/ Sub)

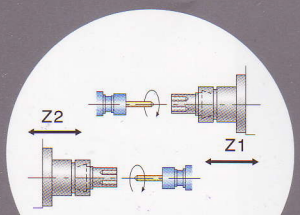

Off center drilling (Front & Back)

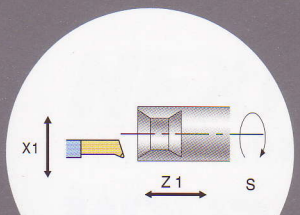

Composlte Control

LAY-OUT

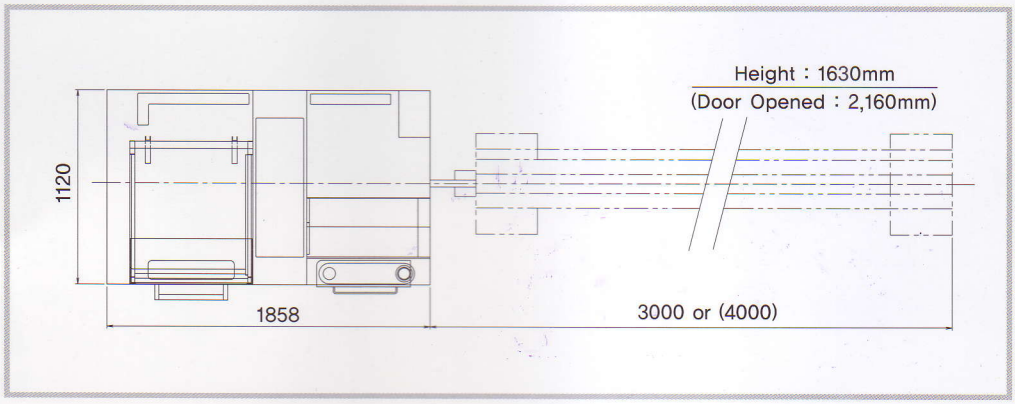

vity With
ance

CNC SYSTEM

- FANUC 0i-TD Controller
- Conversational and Economic Type Software for Network
- A Large Capacily PMC with High Speed for Reducing Cycle Time
- Conversational and Self-Diagnostic Function Displays
- Convenient & Simple Operation Panel comguation

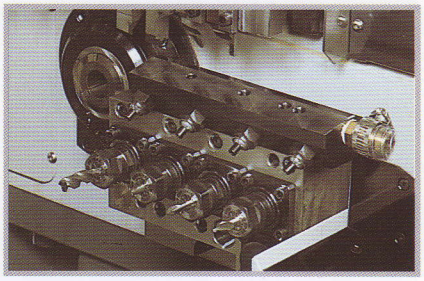

POWERFUL BACK-END TOOL STATION (OPTIONAL)

- Balanced process by Powerful Back-End Machining Reducing Cycle Time
- Rigid Off-center Drilling and Tapping with High Speed and High Accuracy
- Number of Tool (4) : Live up to 4 (Optional)
- Max. Spindle Speed : 5,000rpm
- Motor Output : 1.0kW (Fanuc)

Optimum Structure Design for High Accuracy And Minimum Machining Time

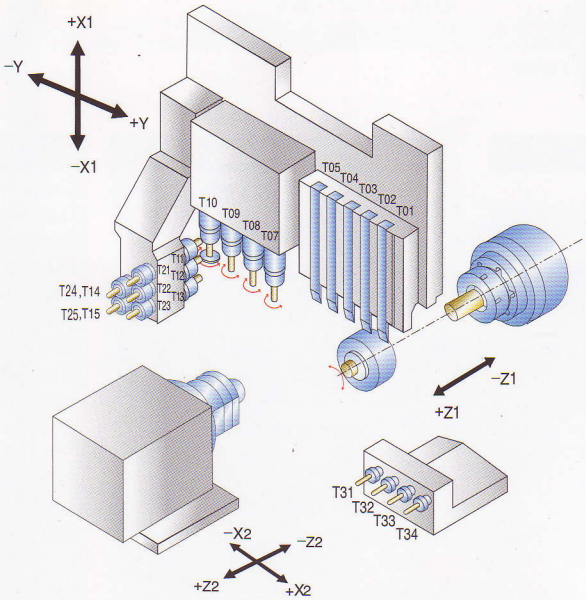

POWERFUL TOOLING SYSTEM AT HIGH SPEED

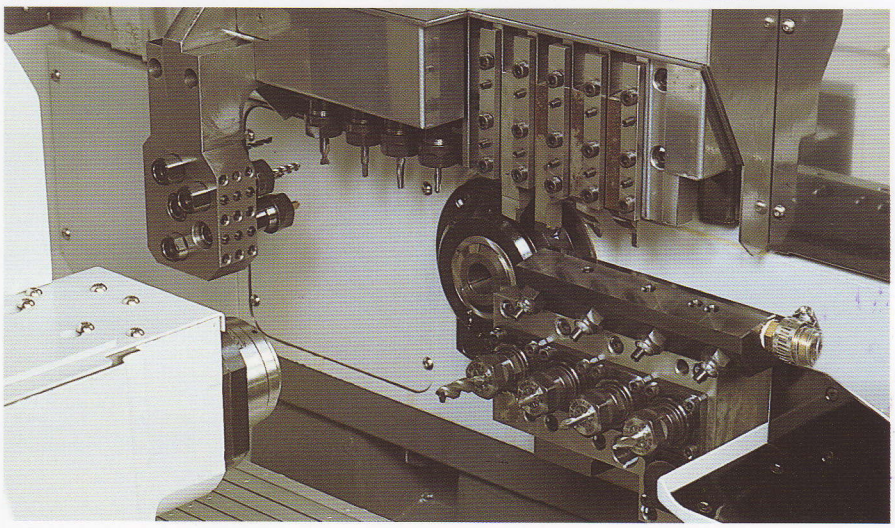

EASY OPERATION SYSTEM

- Arm Type positioning Operation Panel With Convenience
- Fully Opening Type Covers & Doors (UP/ Down, RH/LH)
- Minimized Operational Key With Software Configuration

RIGIDITY/ RELIABILITY

- One Piece Casting Bed Type
- Collet for Revolving Tool (ER16)
- Cut-Off Tool Breakage Detector by Mechanical Sensors
- Cable, Sensor, Main Spindle, Ball Screw Protected against Erosion or Hardening

HIGH ACCURACY/ HIGH PRODUCTIVITY

- Fanuc Built-in AC Spindle Motor
- Ultra Precision Ball Screw/ LM Guide
- 1/1,000° positioning for Main & Sub Spindle
- Keep the Optimal Repeated Precision Level by Ball Screw Dual Pressure
- Rapid Traverse Speed : 24m/min

CONVENIENCE

- Easy Chip Disposal System With Downard Tool Direction
- Safe & Versatile Shock protection Software
- Easy & Simple Operational panel
- Versatile Tool Management Program
- Easy Posilioned Control Panel

PNEUMATIC UNIT

- Easy Trouble Check and Femedy
- Easy Installation of Pneumatic Device
- Easy Maintenance
- Keep Stability With Visible Location against Trouble or Bneakage

■ MACHINE SPECIFICATION

	DESCRIPTION	SA20B	SA32B
Machinig Capacity	Max. Turning Bar dia.	Ø20mm	Ø32mm
	Max. Turning Bar Length	210mm	210mm
	Max. Main Spindle Drilling / Tapping	Ø12mm / M10	Ø12mm / M10
	Max. Sub Spindle Chucking dia.	Ø20mm	Ø32mm
	Max. Back-end Face Drilling / Tapping	Ø10mm / M8	Ø10mm / M8
	Max. Cross Drilling / Tapping	Ø10mm / M8	Ø10mm / M8
	Max. Cross Disc-Mill Dia.	Ø40mm	Ø40mm
Capability	Max. Main Spindle Speed	8,000rpm	8,000rpm
	Max. Sub Spindle Speed	8,000rpm	8,000rpm
	Max. Cross Spindle Speed	6,000rpm	6,000rpm
	Total No. of Tools	19	18
	O.D / Cross Live Tool / Y-Axis ID	OD 6 / Cross 4 / ID 5	OD 5 / Cross 4 / ID 5
	Back-end Face Tools	4 (Std:Live 2, Opt:Live 4)	4 (Std:Live 2, Opt:Live 4)
	Bite Shank	□12x120mm	□16x120mm
	Rapid Travers	24 M/min	24 M/min
	Controllerable Axes	7	7
	Main Spindle Positioning	Cs + 1/1,000°	Cs + 1/1,000°
	Sub Spindle Positioning	Cs + 1/1,000°	Cs + 1/1,000°
Motor	Main Spindle	2.2/3.7 kW	5.5/7.5 kW
	Sub Spindle	1.5/2.2 kW	1.5/2.2 kW
	Cross Drill / Mill Unit	1.0 kW	1.0 kW
	Back-end Face Tools	1.0 kW	1.0 kW
	Coolant Pump Unit	0.45 kW	0.45 kW
	Lubrication Pump Unit	0.04 kW	0.04 kW
Dimension	Coolant Capacity	200 ℓ	200 ℓ
	Center Height	1,000 mm	1,000 mm
	Length X Width X Height	2,030×1,120×1,620	2,030×1,120×1,620
	Net Weight	2,700kg	3,000kg

※ Above Specifications are subject to change without prior notice.

■ NC SPECIFICATION

DESCRIPTION	SA20B / SA32B
NC Controller	FANUC 0i-TD
No. of Controllable Axis	7
Axis Designation	Z1, X1, Y, Z2, X2, C1, C2
Min. Input Increment	0.001mm
Min. Command Increment	0.001mm (X Axis : 0.0005mm)
Max. Programmable Value	±8 digits
Interpolation Function	Linear / Circular
Rapid Traverse	24m/min
Feedrate	1~6,000mm/min
Feedrate Override	0~150%, 10% step
Dwell	G04 0.0001~999999.999
ABS / INC Command	X,Y,Z,C : Absolute U,W,V,H : Incremental
Tool Offset	±6 digits
No. of Tool Offset	64sets
CRT / MDI	8.4″ (SA20B), 10.4″ (SA32B) COLOR LCD
Display Language	English, Others
Tape Memory	2560 M
No. of Registerable Program	400 sets
Miscellaneous Function	M5 / M3 digits
Main Spindle Function	S4 digits
Tool Function	T4 digits

※ Above Specifications are subject to change without prior notice.

Machine Standard

- Rotary Guide Bush Holder Unit
- Part Conveyor
- M-code Air Blow
- Part Eject Detector
- 4 Spindle Cross Drill Unit
- Main/Sub Spindle Positioning : 1/1,000°
- Cs Control on Main & Sub Spindle
- Back Revolving Tools (2)
- Coolant Flow Detector
- Tool Height Gauge
- Work Light
- Patrol Light
- Barfeeder Interface
- Service Tool Kit
- Instruction Manual
- Fanuc Manual (Operator/Maintenance/Parameter)
- Y-Axis Tool Unit

Manchine Option

- Barfeeder
- Long Part Discharging Unit
- Chip Conveyor
- Back Revolving Tools (4)
- M-Code Oil Blow
- Cut Off Detector
- Fixed Type Guide Bushing Holder Unit
- Thread Whirling Unit

NC Standard

- Circle, Semi-circle Designation
- Override Cancel
- Work Coordinate Shift (G50)
- Machine Lock
- Single Block
- Self-Diagnostic Function
- Software Operation Panel
- Tool Offset Display
- Input / Output Interface
- Working Hour/No. of Parts Display
- Tool Radius Compensation
- Chamfer / Corner R
- Automatic Power Off
- Inch / Metric Conversion
- Back-ground Editing
- Constant Surface Speed Control
- Chasing Function
- Synchronous / Composit Function
- Z1-Z2 Synchronous Function
- MPG(handel wheel) : 0.001mm
- I/O Interface (RS232C)
- Synchronous Control (Main&Sub)
- Rigid Tapping on All Spindles

NC Option

- MPG Program Check
- IC card
- Additional G-Code
- FANUC Warranty Service (2 years)

NEXTURN

SWISS TURN LEADER

400-29, Gomae-Dong, Kiheung-Gu,
Yongin-Si, Kyungki-Do, Korea
TEL : 82-31-288-2092
FAX : 82-31-288-2094
E-mail : overseas@nexturn.co.kr
Homepage : http://www.nexturn.co.kr

ISO 9001 / 14001
Registered Firm

2010. 03. 1R